ANALOG VLSI MOTION DISCONTINUITY DETECTORS FOR IMAGE SEGMENTATION

Jörg Kramer[1], *Rahul Sarpeshkar*[2] *and Christof Koch*[3]

California Institute of Technology, Computation and Neural Systems 139-74, Pasadena, CA 91125
[1]kramer@klab.caltech.edu [2]rahul@pcmp.caltech.edu [3]koch@klab.caltech.edu

ABSTRACT

Two analog integrated circuits that locate velocity discontinuities in a one-dimensional image are presented. Each circuit combines the image-sensing stage and the motion-processing stage on a single chip. The circuits are compact and operate in real time, so that they are suitable for use in mobile systems to perform image segmentation for navigation purposes. Both chips were tested with high-contrast stimuli and showed good performance.

1. INTRODUCTION

Segmentation of images into different objects and a background is an important step in most image-processing systems. In dynamic environments, objects can be segregated by their different apparent velocities with respect to the observer. These are either induced by motion parallax due to ego-motion of the observer or by independent motion of the objects.

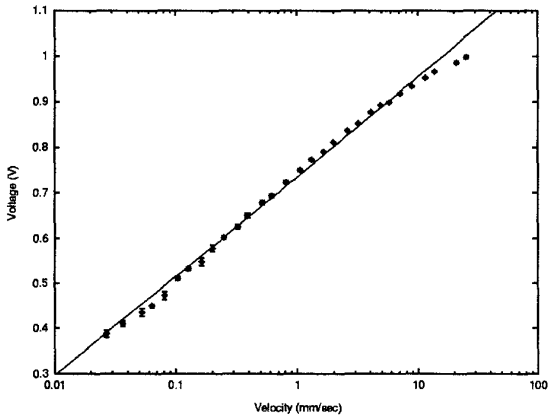

Fig. 1. Output voltage of an elementary velocity sensor versus velocity of a high-contrast dark-to-bright edge image with a theoretical fit. The velocity is encoded logarithmically in the output voltage over several orders of magnitude.

Segmentation based on motion discontinuities is less error-prone in complex environments with structured objects than segmentation based on extracted edges, but it requires significantly more processing power. For systems working in dynamic environments, real-time data processing is often crucial, however, and most mobile systems additionally place severe restrictions on size, power consumption, and cost of their image processing circuitry. These requirements are difficult to meet simultaneously with traditional approaches.

In this article, two circuits are reported that tackle the problem by using single-chip parallel architectures of analog circuits operating in the subthreshold domain, fabricated with standard CMOS technology. Each chip contains an array of elementary velocity sensors with integrated photoreceptors as an input stage [1]. Over a large velocity range, these sensors logarithmically encode the velocity v of an edge image in the chip plane with an analog output voltage V, according to

$$V = \frac{\kappa + 1}{\kappa^2} V_T \cdot \log \frac{v}{v_o} \qquad (1)$$

where κ denotes the backgate coefficient, V_T the thermal voltage, and v_o a scaling parameter that depends on the exact implementation. Figure 1 shows the measured response of such an elementary velocity sensor to a high-contrast edge with a theoretical fit according to (1). The output voltages for the two opposite directions of motion appear at separate terminals.

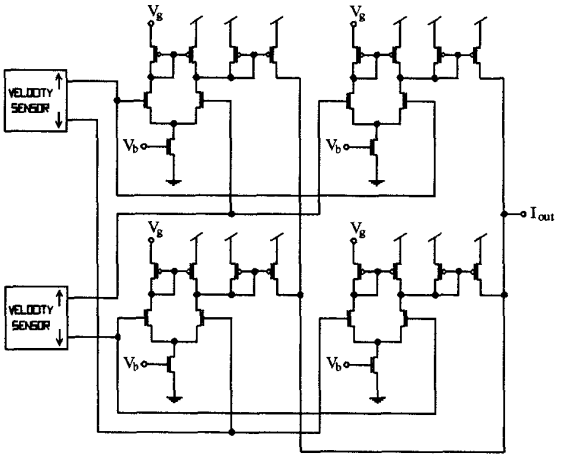

Fig. 2. Schematic of the circuit for the extraction of motion discontinuities between two adjacent sensing locations. The circuit contains four comparators, each with a threshold-control V_g and a rectifier circuit at its output. An output current I_{out} is measured, whenever the outputs of the two adjacent velocity sensors, for either direction, differ significantly.

0-7803-3073-0/96/$5.00 ©1996 IEEE

2. DISCONTINUITY CIRCUIT

The first circuit finds motion discontinuities in the image and generates current signals at their locations. This is done by comparing the directional output voltages of pairs of adjacent velocity sensors in a one-dimensional array. If the voltage difference of a pair for either direction exceeds a certain threshold, a current is activated at its location, signalling a discontinuity. The value of the current is a monotonic function of the speed difference. If the difference is below the threshold, no current is reported. The threshold is set with a bias voltage such that it exceeds the fixed-pattern and temporal noise of the velocity-sensing array for uniform image motion.

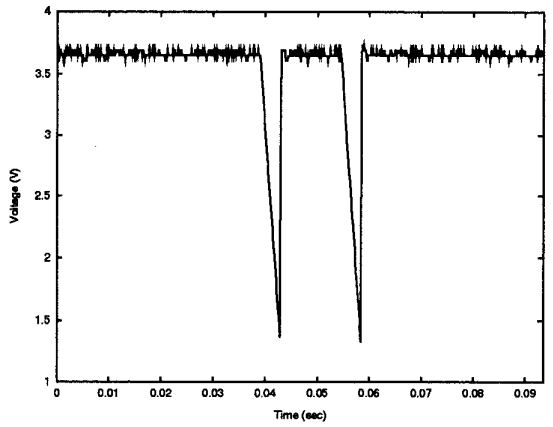

Fig. 3. Response of the motion-discontinuity chip to a black bar traveling across a striped background, that moves at a different velocity. The voltage peaks on the scope trace show the locations of the bar's edges on the imaging array. The scope trace was obtained by converting the current signals, scanned off the chip at a rate of 260 Hz, into voltages. The offset of the I-V conversion was 3.7 V and the conversion factor was -1 V per 50 nA. The rise times of the voltage peaks were limited by the off-chip I-V conversion circuit. For the used offset control setting of the comparators ($V_{dd} - V_g = 0.1$ V) no current was output at locations without motion discontinuities.

The schematic of the discontinuity circuit is shown in Figure 2. For each direction of motion, the outputs of adjacent velocity sensors are fed into a pair of circuit elements, each comprising a comparator with a current rectifier at its output. Each element only outputs a current if its righthand input voltage V_r is higher than its lefthand input voltage V_l by a margin set by the bias voltage V_g, such that

$$V_r > V_l + \frac{V_{dd} - V_g}{\kappa} \tag{2}$$

where V_{dd} denotes the supply voltage. The two elements have interchanged inputs and are connected at their outputs, so that an output current is observed, whenever

$$|V_i - V_{i+1}| > \frac{V_{dd} - V_g}{\kappa} \tag{3}$$

where V_i and V_{i+1} are the output voltages of the adjacent velocity sensors for the given direction. The output current I_{out} is given by

$$I_{out} = I_o e^{\frac{\kappa V_b}{V_T}} \left[\frac{\Theta(e^{\frac{\kappa V_i}{V_T}} - e^{\frac{\kappa V_{i+1} + V_{dd} - V_g}{V_T}})}{e^{\frac{\kappa V_i}{V_T}} + e^{\frac{\kappa V_{i+1}}{V_T}}} + \frac{\Theta(e^{\frac{\kappa V_{i+1}}{V_T}} - e^{\frac{\kappa V_i + V_{dd} - V_g}{V_T}})}{e^{\frac{\kappa V_i}{V_T}} + e^{\frac{\kappa V_{i+1}}{V_T}}} \right] \tag{4}$$

where I_o denotes the current-scaling parameter of the bias transistor and $\Theta(.)$ the Heaviside function.

Finally, the output currents obtained from the two directions of motion are added on a common line, so that the circuit equally responds to motion discontinuities in both directions.

The circuit was implemented with a 2 μm CMOS process as a linear array comprising 24 velocity sensors with a pitch of 60 μm, giving 23 discontinuity measurements. The total size of the circuitry is 1.5 mm $\times$ 1.1 mm.

Figure 3 shows a snapshot response of the circuit to a black bar translating in front of a moving background of black and white stripes for $V_{dd} - V_g = 0.1$ V. The output currents at the different locations were scanned out with an on-chip scanner, passed off chip through a current-to-voltage converter, and displayed on an oscilloscope. The two peaks mark the locations of the edges of the black bar. The data of Figure 3 was taken with the bar moving in the same direction as the background, but the same type of signal was observed for both directions of motion of bar and background, as long as the velocities differred significantly. For uniform image motion, no output was observed with the chosen threshold setting.

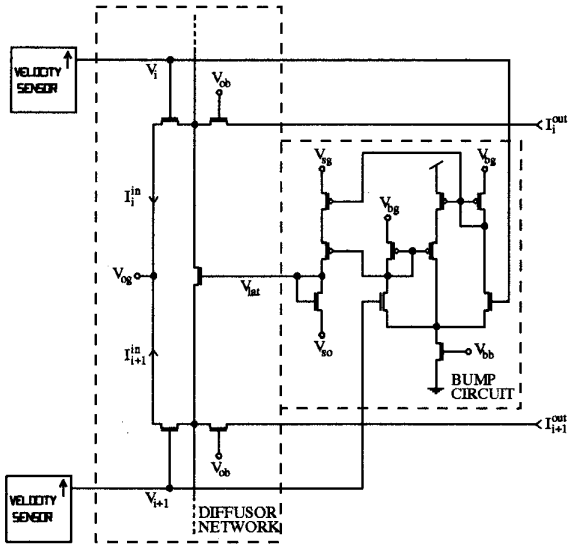

Fig. 4. Schematic of a circuit element of the regularization network for motion smoothing and segmentation. The network was only implemented for one direction of motion; for the opposite direction an identical circuit would be needed. The directional output voltages of the velocity sensors serve as inputs to a current-mode resistive network, where adjacent nodes are connected through a diffusor. The characteristics of the diffusor are controlled by the inputs through a bump circuit, such that its resistance is low if they are similar and high if they are significantly different. This results in smoothing over small voltage differences and segmentation between large ones.

3. SEGMENTATION CIRCUIT

The second circuit presented in this article segments an image into regions of similar velocities, while preserving

the velocity information. The output voltages of a one-dimensional array of velocity sensors are fed into a nonlinear resistive network that smoothes across small voltage differences, as induced by noise in the velocity-sensing array, and segments between large voltage differences, that are due to motion discontinuities [2]. Each node of the network outputs a current that is a monotonic function of the reported velocity after smoothing and segmentation.

An element of the smoothing-and-segmentation circuit is schematically shown in Figure 4. The output voltages of the velocity sensors drive a current-mode resistive regularization network [3], where the resistance between two adjacent nodes is controlled by a modified version of the bump circuit [4] to be low if the two velocities are similar and high if they differ substantially. The input current to the network is scaled by the bias voltage V_{og}; the amount of shunting to the outputs is controlled by the bias voltage V_{ob}; the bias voltage V_{so} controls the voltage V_{lat} that sets the resistance of the diffusor between the two nodes; the bias voltage V_{bg} in the bump circuit sets the width of the bump, *i.e.* the range of the differential input voltages for which a bump current is output; the bias voltage V_{sg} scales the bump current. Note that V_{ob} and V_{so} have to increase or decrease concurrently in order that the shunting and spreading currents of the diffusor network remain comparable.

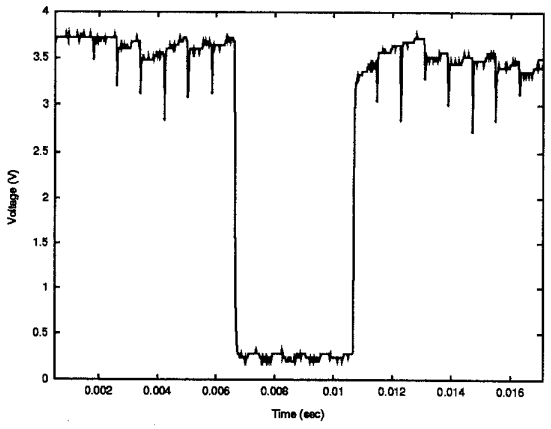

Fig. 5. Response of the motion-segmentation chip to a black bar traveling across a striped background. The bar moved at a lower velocity than the background. The low-voltage region on the scope trace corresponds to the location of the bar. The scope trace was obtained by converting the output currents of the segmentation network, scanned off the chip at a rate of 1.25 kHz, into voltages. The offset of the I-V conversion was 0.2 V and the conversion factor was 1 V per 100 nA. For small differences between output voltages of neighboring velocity sensors the response is smoothed, while for large ones the discontinuities are preserved.

The output current I_i^{out} at node i is related to the regularized velocity $\bar{v}_i$ obtained for that node by

$$I_i^{out} \sim \left(\frac{\bar{v}_i}{v_o}\right)^{\frac{\kappa+1}{\kappa}} \tag{5}$$

The power-law dependence comes about because V_i is the voltage on a *pair* of stacked diodes in the velocity sensor of [1], while in this circuit it is the voltage on the gate of a *single* NFET with a fixed source voltage.

The circuit was implemented as a linear array containing 20 velocity sensors, resulting in 19 network output nodes. The same 2 μm CMOS process and the same 60 μm pitch was used as for the discontinuity chip. The circuit was designed to operate for only one direction of motion, but its extension to two directions is straightforward. The total size of the circuitry is 1.26 mm $\times$ 0.825 mm.

The response of the circuit to a black bar stimulus translating in front of a moving background of black and white stripes is shown in Figure 5. The bar was moving in the same direction as the background, but at a much lower speed. The output currents were scanned out with an on-chip scanner, passed off chip through a current-to-voltage converter, and displayed on an oscilloscope. The image was properly segmented into two domains of different velocities. The noise on the scope trace is due to crosstalk from the scanning clock. Very similar output data was obtained for a regularization network where the bump circuits are controlled by the voltage nodes in the network instead of the input nodes.

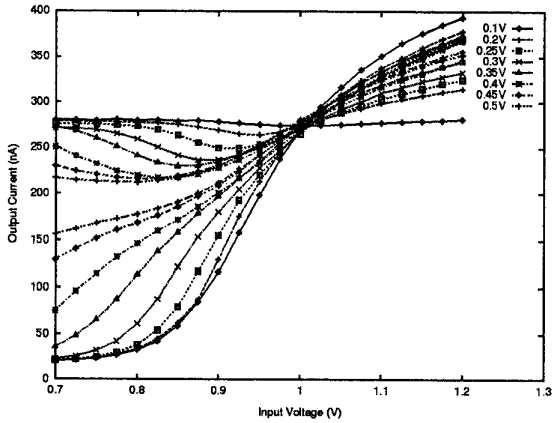

Fig. 6. Measured characteristics of the network element shown in Figure 4 for different values of the smoothing parameter V_{so}. The input voltage V_i was held at 1.0 V, while V_{i+1} was varied. The output current I_i^{out} is displayed as a function of the input voltage V_{i+1}. At small V_{so}, I_i^{out} is not influenced by V_{i+1}, *i.e.* the diffusor is not conducting current. At larger V_{so}, a current flows through the diffusor for small $|V_{i+1} - V_i|$ (smoothing), saturating or even decreasing towards larger $|V_{i+1} - V_i|$ (segmentation).

Figure 6 shows the characteristics of the network element of Figure 4 for different values of V_{so}. The output current I_i^{out} at one network node with a constant input voltage V_i is plotted against the input voltage V_{i+1} at the other network node. If V_{i+1} is smaller than V_i, part of the fixed input current I_i^{in} at node i flows through the diffusor to node $i+1$. For small V_{so} values this current is small and I_i^{out} is approximately equal to I_i^{in}. For intermediate V_{so} values the diffusor current becomes significant and I_i^{in} decreases accordingly, as long as the voltage difference $V_i - V_{i+1}$ is small and the bump current keeps the diffusor on. With increasing voltage difference the bump circuit gradually shuts the diffusor off and I_i^{out} becomes equal to I_i^{in}. In the intermediate V_{so} domain the diffusor thus exhibits the behavior of a resistive fuse [5]. For large V_{so} values the diffusor stays on and its current monotonically increases with the voltage difference, saturating when it approaches I_i^{in} with I_i^{out} close to zero. In the large V_{so} domain the diffusor therefore exhibits the characteristics of a saturating resistor [6]. If V_{i+1}

is increased beyond V_i, node $i+1$ delivers an increasing current to node i through the diffusor in spite of the bump circuit weakening the lateral spreading in the diffusor. The output current I_i^{out} thus rises monotonically with V_{i+1}.

4. CONCLUSION

Two algorithms for image segmentation in one dimension, based on motion discontinuities, were implemented with analog VLSI. Both circuits comprise an image-acquisition stage, a velocity-sensing stage, and a discontinuity-detection stage on a single chip. The test results show that such inexpensive, compact, low-power, analog, integrated circuits can be used for real-time image segmentation in dynamic environments. They are therefore particularly suitable for mobile systems, in such fields as vehicle navigation, robotics, and remote sensing.

ACKNOWLEDGMENT

This work was supported by Daimler-Benz and by grants from the Office of Naval Research, the Center for Neuromorphic Systems Engineering as a part of the National Science Foundation Engineering Research Center Program, and by the Office of Strategic Technology of the California Trade and Commerce Agency. Fabrication of the integrated circuits was provided by MOSIS.

REFERENCES

[1] Kramer, J., Sarpeshkar, R. and C. Koch. "An Analog VLSI Velocity Sensor". In *Proc. 1995 IEEE Int. Symp on Circuits and Systems*, Seattle, WA, pp. 413-416, May 1995.

[2] Koch, C., Marroquin, J. and A. Yuille. "Analog 'neuronal' networks in early vision". *Proc. Nat. Acad. Sci., USA (Biophysics)*, vol. 83, pp. 4263-4267, 1986.

[3] Boahen, K. A. and A. G. Andreou. "A contrast sensitive silicon retina with reciprocal synapses". In *Advances in Neural Information Processing Systems 4*, Touretzky, D. S., Ed. San Mateo, CA: Morgan Kaufman, 1991, pp. 764-772.

[4] Delbrück, T. "'Bump' circuits for computing similarity and dissimilarity of analog voltages". *Proc. Int. Joint Conf. on Neural Networks*, Seattle, WA, pp. I-475-479, July 1991.

[5] Harris, J. G., Koch, C., Luo, J. and J. Wyatt. "Resistive fuses: analog hardware for detecting discontinuities in early vision". In *Analog VLSI Implementations of Neural Systmes*, Mead, C. A. and M. Ismail, Eds. Norwell, MA: Kluwer, 1989, pp. 27-56.

[6] Mead, C. A., *Analog VLSI and Neural Systems*, Reading, MA: Addison-Wesley Publishing, 1989, pp. 116-119.